driade

LOU READ

an armchair/character, with an organic outline, perhaps anthropomorphous, conceived with leather directly fixed on a fiberglass skeleton. the armchair is entirely covered in leather and hand-stitched. the unexpected comfort is given by its perfect ergonomics.

Design by Philippe Starck & Eugeni Quitllet
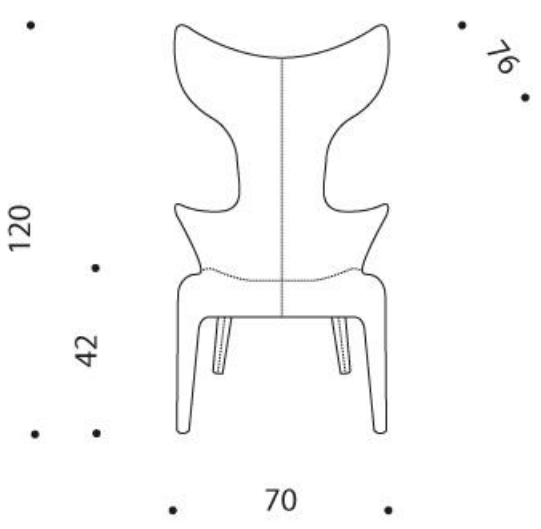
DIMENSION